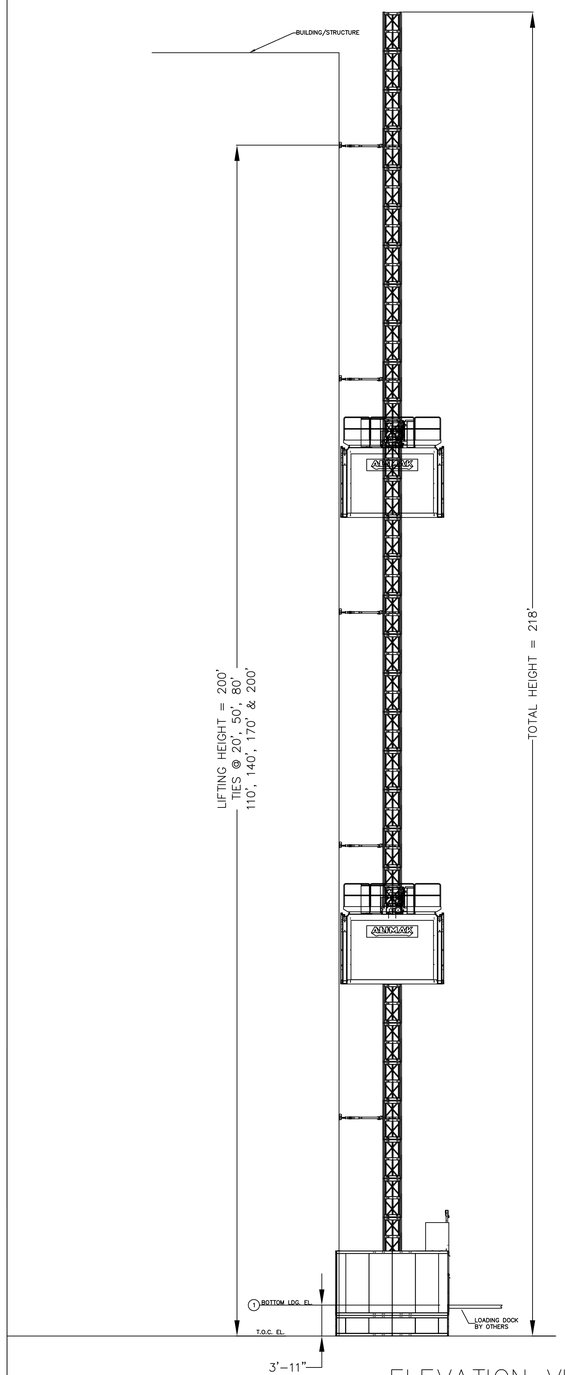

ELEVATION VIEW

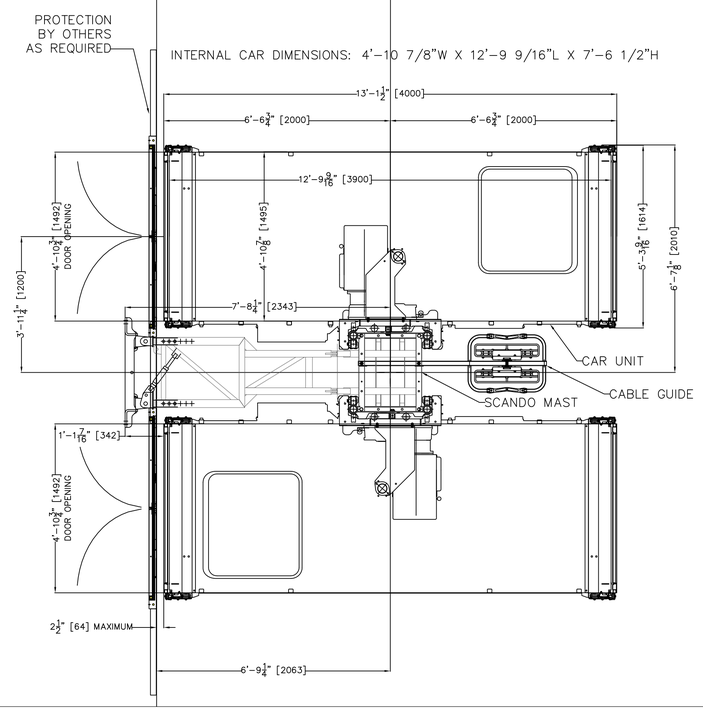

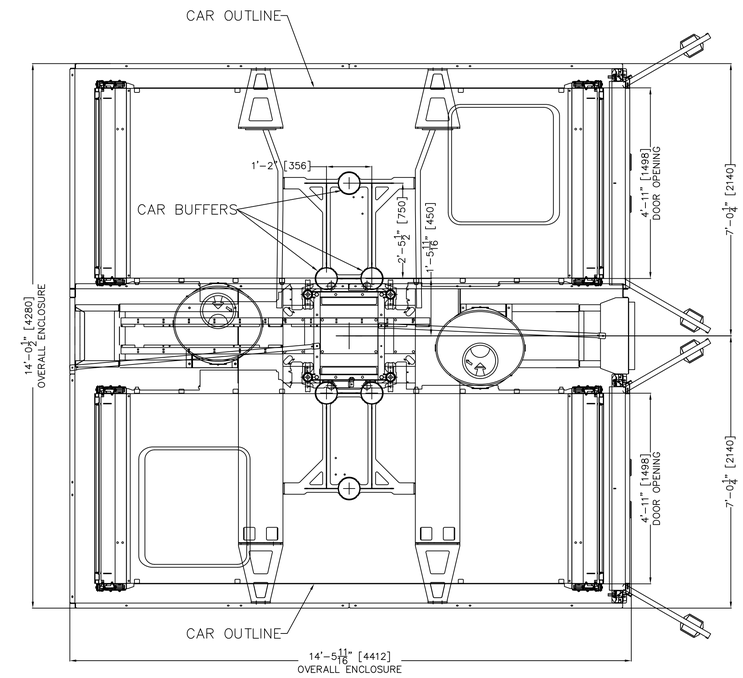

MINIMUM FOUNDATION REINFORCEMENT REQUIREMENTS

X – X

#5 REBAR AT 12" C/C

Y – Y

#5 REBAR AT 12" C/C

3625 PSI CONCRETE

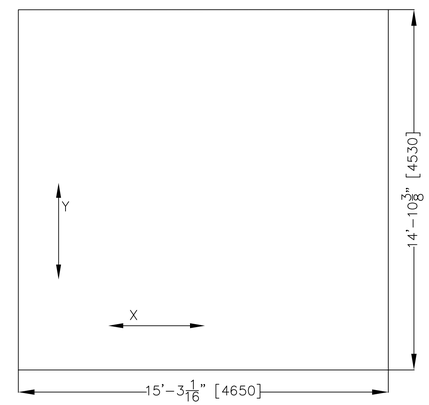

FOUNDATION PLAN VIEW

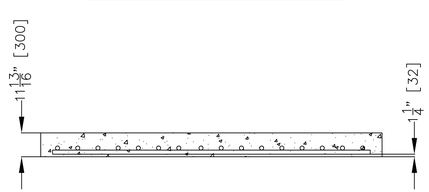

FOUNDATION SIDE VIEW

NOTE: VALID FOR MAST HEIGHTS UP TO 500'

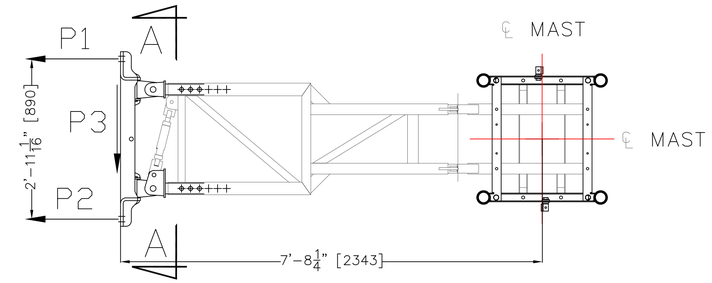

TYPE S3A TIE DETAIL

MAIN FRAME 9100630–390 & WALL BRACKET 9101500–210

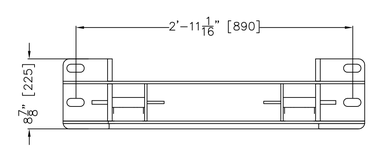

SECTION A–A

P1 = 17.95 KIPS
P2 = 17.95 KIPS
P3 = 6.8 KIPS

LOAD ON BASE INCLUDING 100% IMPACT
P5 = 68.6 KIPS

CAR BUFFER REACTION
P6 = 60.5 KIPS

MACHINE TECHNICAL DATA SPECS	
MACHINE TYPE	ALIMAK SCANDO 650 C52/39
CONFIGURATION	DUAL
LENGTH	12'–9 9/16"
MAST HEIGHT	218'
CAPACITY	7100 LBS / CAR
RATED SPEED	175 FT/MIN
MOTORPACK TYPE	VFC
NUMBER OF MOTORS	3 x 11kW
POWER SUPPLY REQUIREMENTS (PER CAR)	
VOLTAGE	480V, 3 PHASE
BREAKER SIZE	100A
FREQUENCY	60 HZ
STARTING CURRENT	91A
POWER CONSUMPTION	66 kVA

COMPONENT WEIGHTS	
BASE ENCLOSURE (W/ COMPLETE CAR)	7605 LBS
CAR WITH DOORS	3329 LBS
MOTORPACK (VFC)	1965 LBS
MAST SECTION (DUAL)	298 LBS

PROJECT NOTES

1. TIE IN LOADS SHOWN WERE CALCULATED BASED ON WIND CODE ASCE 7-02; EXPOSURE C. MAXIMUM IN SERVICE WIND SPEED OF 40 MPH AND MAXIMUM OUT OF SERVICE WIND SPEED OF 100 MPH. TIE IN LOADS SHOWN WERE CALCULATED BASED ON ASCE 7-95 ZONE 0 SEISMIC ACTIVITY.
2. CONCRETE EXPANSION ANCHORS THAT FAIL TO MEET THE REQUIREMENTS OF EITHER MINIMUM EMBEDMENT OR SET TENSIONING SHALL BE REMOVED AND NEW ANCHORS INSTALLED HAVING A DEEPER EMBEDMENT OR LARGER DIAMETER WHERE POSSIBLE.
3. ABANDONED EXPANSION BOLT HOLES ARE TO BE FILLED WITH 5000 PSI NON-SHRINK GROUT.
4. ALL MAST BOLTS AND HARDWARE SCREWS TO HAVE LOCKNUTS.
5. ERECTOR NOTE - ON SITE CONDITIONS SHALL GOVERN. VARIATIONS TO BE REPORTED TO ALIMAK HEK PRIOR TO CONTINUATION OF WORK.
6. ERECTOR TO MAKE USE OF PLUMB BOBS, DROP LINES, LASERS, SPIRIT LEVELS AND SIMILAR TOOLS TO INSURE DIMENSIONAL ACCURACY.
7. MODIFICATIONS OF FURNISHED MAST TIE INS NOT ALLOWED WITHOUT PRIOR APPROVAL OF ALIMAK HEK.
8. ADEQUATE FOUNDATION TO SUPPORT FOOTPRINT AS SHOWN IN PLAN AT BOTTOM LANDING. SEE DATA ON THIS DRAWING FOR FOUNDATION FORCES.
9. ADEQUATE SUPPORT FOR GUIDEMAST FASTENING PER TIE IN SCHEDULE. SEE DATA ON DRAWING FOR GUIDEMAST FORCES.
10. ENGINEER OF RECORD TO VERIFY LANDING STRUCTURE CAN TAKE TIE-IN FORCES.

ALIMAK HEK

ALIMAK HEK, INC.
CONSTRUCTION DIVISION
55 EAST PAULDING DRIVE, SUITE 106–342, DALLAS, GA 30157
TELEPHONE (678) 402–1004 TELEFAX (678) 623–0452

REV	REVISION REMARKS	DATE
A	FIRST DRAWING	10/3/05
B	SECOND DRAWING NOTE ADDED	10/7/05
C	TYPE S3A TIE INFORMATION ADDED	2/14/07
D	LOAD INFORMATION ADDED	7/9/09

THE INFORMATION CONTAINED IN THIS DOCUMENT IS THE SOLE PROPRIETARY PROPERTY OF INTERVECT, USA, INC. THE EXPRESS WRITTEN CONSENT OF INTERVECT USA, INC. IS REQUIRED FOR ANY REPRODUCTION OR DISTRIBUTION OF THE ABOVE INFORMATION

ALIMAK SCANDO 650 C52/39

JOB NAME: GENERAL LAYOUT

JOB LOCATION:

CUSTOMER NAME:

DRAWN BY	DATE	SCALE	REV
GEJ	7/9/09	NONE	D

CHECKED BY	PAGE	DWG NO.
GEJ	1 OF 1	20050517